REMOVAL

HINT:
A bolt without a torque specification is shown in the standard bolt chart (See page SS-2).

1. REMOVE DECK BOARD SUB-ASSEMBLY

2. REMOVE DECK TRIM COVER REAR

(a) Remove the 2 clips.
(b) Using a moulding remover, remove the deck trim cover rear.

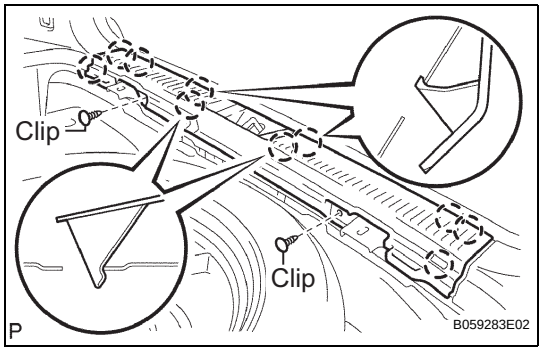

3. REMOVE REAR BUMPER COVER

(a) Remove the 6 nuts.

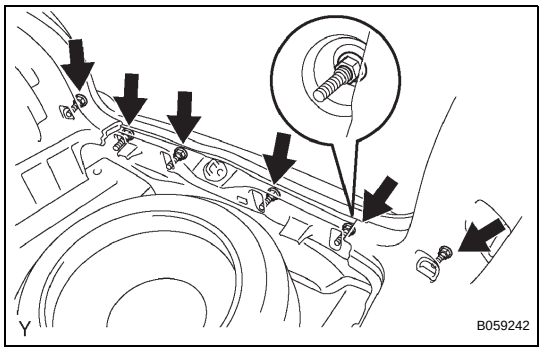

(b) Remove the 8 screws.
(c) Disengage the 2 hooks and 2 clips, and remove the rear bumper cover.

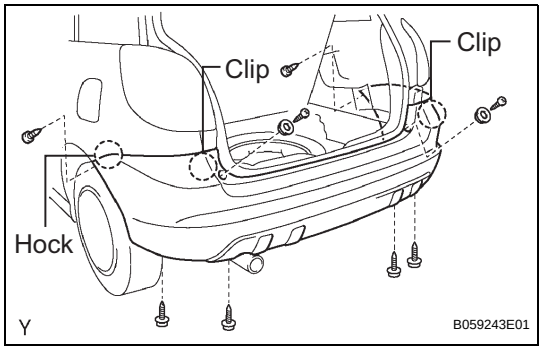

4. REMOVE REAR BUMPER ENERGY ABSORBER

5. REMOVE REAR BUMPER BAR REINFORCEMENT CENTER

(a) Remove the rear bumper bar reinforcement from the rear bumper energy absorber.

6. REMOVE REAR BUMPER SPOILER LH (w/ Rear Spoiler)

(a) Remove the 4 retainers and rear bumper spoiler LH.

7. REMOVE REAR BUMPER SPOILER RH (w/ Rear Spoiler)

(a) Remove the 3 retainers.
(b) Disengage the hook and remove the rear bumper spoiler RH.

8. REMOVE REAR SPOILER (w/ Rear Spoiler)

(a) Remove the 3 retainers, 2 screws, rear spoiler retainer and rear spoiler.

9. REMOVE BUMPER MOULDING SET BOLT NO. 1

10. REMOVE REAR BUMPER REINFORCEMENT NO. 1

(a) Remove the 4 nuts and rear bumper reinforcement No. 1.

11. REMOVE REAR BUMPER REINFORCEMENT NO. 5

(a) Remove the 4 clips and 2 rear bumper reinforcements No. 5 from the rear bumper reinforcement No. 1.

12. REMOVE REAR BUMPER ARM LH

(a) Remove the 3 bolts and rear bumper arm LH.

(b) Use the same procedures described for the LH side.